Commercial Filters

MEET HIGHEST DEMANDS

Custom-Built Service Available

Emaux
water technology

Commercial Aquatic Equipment

www.emauxgroup.com

Innovative and Enterprising

Emaux is a recognized global manufacturer that meets and surpasses customers' expectations customers for best-in-class products and services. For over 38 years, we have been actively engaged worldwide in key water projects, working closely with industrial consultants, developers, and engineers. The proven performance of our manufacturing systems makes us the ideal partner for customers seeking a robust water solution to enrich their leisure living and professional experience.

Large Production Centre

Headquartered in Hong Kong and Europe, our state-of-the-art 80,000m2 production facility in Zhong Shan, China, enables us to serve local and global markets with advanced efficiency.

Our R&D team actively pursues breakthroughs in product innovation and OEM production leveraging know-how in mechanics, automatics, electronics, hydraulics, and plumbing.

Automated manufacturing procesess employ the most advanced technologies in mould making, plastic blow moulding, plastic injection, fibreglass production, electronic controls, and assembly. Flexible one-stop solutions are provided to meet every need for water treatment and water leisure.

Atlantis in China

Chimlong Ocean Kingdom in China

Gumbuya World in Australia

Project References

Intercontinental Golf Resort & Spa in Fiji

Huge Capacity
Advance Technology

Equipped by advanced machinery

Pressure Testing

Bobbin winding

We are your trustworthy water solution partner

Quality is at the heart of everything we do, without compromise on efficiency in order to ensure the best performance of our products under the most demanding environmental conditions. Our production facility is ISO9001:2008 certified, and the most stringent international standards have been met for individual products, including UL, ETL and CSA (Canada and the U.S), TUV-GS and RoHS (Europe), SAA and C-Tick (Australia and New Zealand), CCC (China), and SASO (Saudi Arabia). Rigorous quality control processes are also in place to deliver consistent quality.

Because we regard quality as the life of enterprise, we have won long-term support and trust of our customers and business partners all over the world. We offer specialized products and custom-built services for :

* Swimming pools, commercial spa
* Aquatic centres, water parks,
* Aquaculture, aquariums,
* Water features and large water treatment systems.

For further project references, please refer to our webpage: www.emauxgroup.com/support

Glass Fiber Reinforced Polyester (GRP)
Sand Filter

With the professional engineering experience and a large Glass Fiber Reinforced Polyester (GRP) production facility, Emaux is capable of designing and manufacturing a wide range of commercial sand filters constructed of a multiple-layer moulded structural inner layer and a continuous outer filament winding by computer controlled winding machines.

Multi-layer construction (from inner to outer):

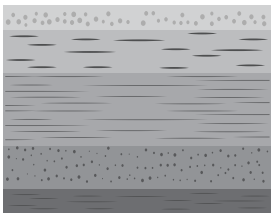

① ISO or VE gelcoat barrier, corrosion resistant
② Woven roving fibers with ISO polyester resin, water proofing
③ Woven roving with high content of fiberglass, structural strength
④ Continuous outer filament winding with ISO resin, reinforced to withstand pressure
⑤ PU surface coating, UV resistant and dirt protection

Large Production Capacity

Reinforced Inner Tank

Computer Controlled Filament Winding

Advantages:

Non-Corrosive | UV Resistance | Chemical Resistance | Nil Maintenance | Non-Electrical Conductive | Long Service Life | Low ratio of Thermal Expansion | Light and Easy Handling

The filter tank is manufactured of durable, non-corrosive fiberglass and resin, with automatic bobbin winding technology, UV resistant composites, which allow the filter to operate under extreme weather conditions.

Standard Features:

* Available with laterals or nozzle plate system for air scouring capabilities
* Optional accessories includes sight glass, manhole, union drain, and air purge
* Dual/triple manifold distribution evenly increases the flow rate

Components :

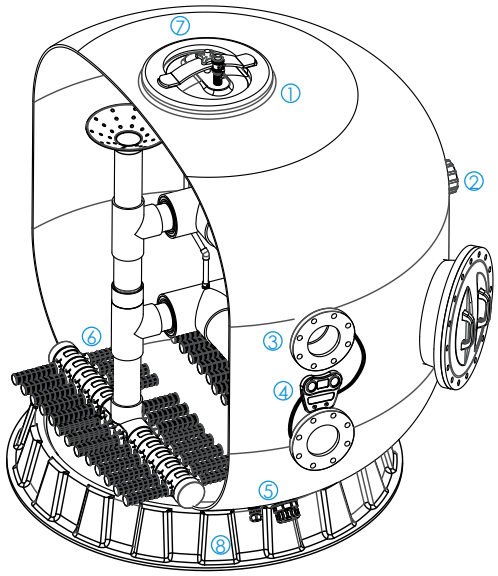

① **Manhole** Lateral manhole for easy access for maintenance and service of internal system

② **Sight Glass** Allows wide observation of media status and backwash effect

③ **Flange** Heavy duty FRP flange connections in either ANSI or DIN standard

④ **Manometer** High quality pressure gauge to monitor the pressure inside the filter tank

⑤ **Union Drain** A quick discharge point for water and filter media

⑥ **Lateral System** Constructed of ABS+PP material with rigid structure and 0.4mm slit

⑦ **Air Vent Valve** Automatic release of air bubbles in the filtration system

⑧ **Base** Flat base for increased stability

* Stainless Steel parts are made of AISI 316 S.S. Plastic parts are in PVC and ABS
* Gasket or O-ring sealants are in EPDM or VITON material for ozone resistance

Customized maximum size and performance:

87psi/ 6bar	650 m³/h	27m²	3m	10m
Max Pressure	Max Flow Rate	Max Filtration Area	Max Diameter	Max Length

Custom-Built Service

Fit all projects' needs!

Emaux offers a fully customized service from system design, dimensions, working pressure, connections, to internal and external finishing to meet your project needs.

The products are designed and manufactured in accordance with the latest international industry standards such as BS EN-13121, European Directive of Pressure Vessels 97/23/EC; and employ a quality assurance program that starts with confirmation and testing of raw materials right through all stages of the manufacture and final testing.

Each sand filter is individually pressure tested and comes with its own factory test certificate, quality assurance record and serial number.

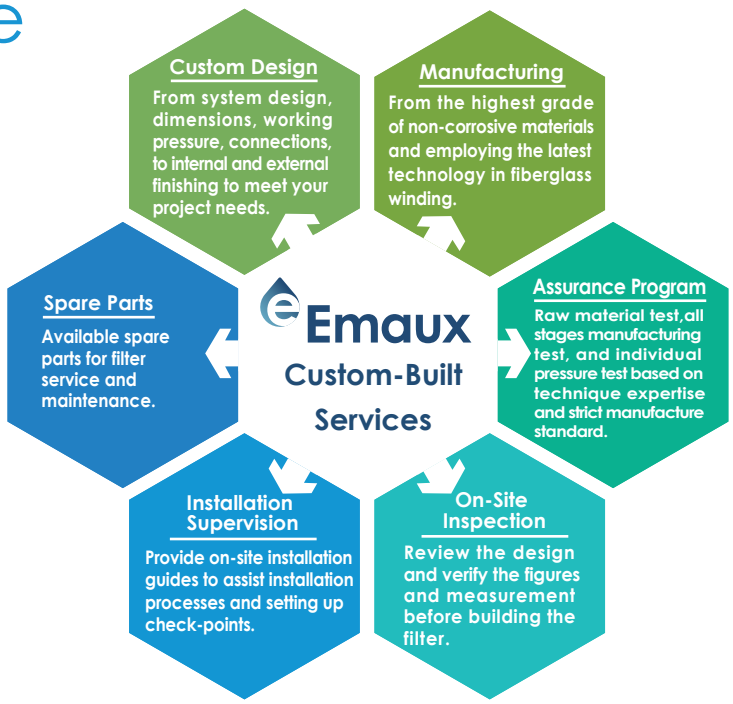

Standard Model:

NL, E, K Series .....page 6 - 8

H Series .....page 9-12

Large Size Horizontal Sand Filter .....page 13-14

Commercial Filter NL SERIES E SERIES K SERIES

Filtration System

laterals / nozzles

Design Filtration Velocity

$50m^3/h/m^2$

Max Operating Pressure

36psi(2.5bar)
58psi(4.0bar)

Max Temperature

43°C (109°F)

Suggested Size of Media

0.5-0.8mm
1-2mm

Excellent Performance with Deep Sand Bed!

Application Suggestions:

* Competition swimming pool
* Aquatic park and aquarium
* Commercial spa, fountain
* Water treatment plant

Product Features:

* Multi-construction layers: non-corrosive and chemical protective
* UV resistance, suitable for operation under prolonged sunlight
* High filtration standard with deep sand bed
* Bobbin wound fiberglass reinforcement with polyester resin
* Available with laterals or nozzle plate system for air scouring capabilities
* Optional accessories includes sight glass, manhole, union drain, and air purge.

NL SERIES

Optional Accessories:

Sightglass: 114mm

Code: E012024

Air purge: 20mm

Code: E012054

Manhole: Dia.400mm

Code: 4105064354

Laterals System:

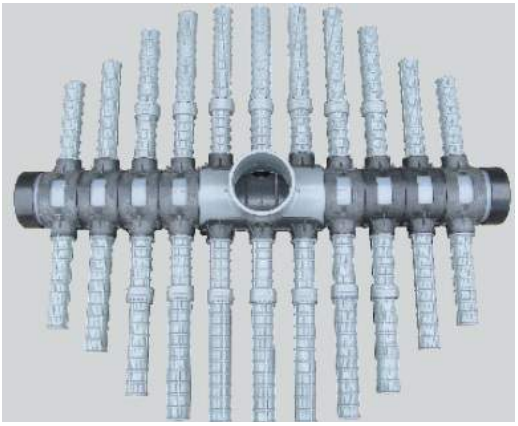

Nozzle System:

Flange connection standard optional:
GB(HG20592 PN1.0MPa) or ANSI(ANSI B16.5(1988) Class150)

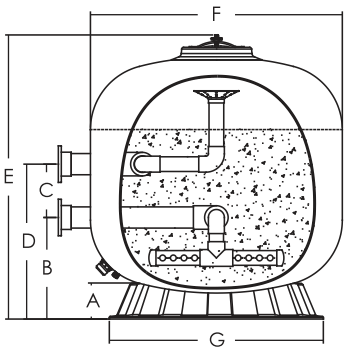

Product Dimensions:

Model	A mm	B mm	C mm	D mm	E mm	F mm	G mm
NL1200	170	565	350	915	1410	1200	1000
NL1400	190	565	350	915	1570	1400	1220
NL1600	200	650	350	1000	1740	1620	1365
NL1800	220	690	415	1105	2040	1790	1630
NL2000	220	770	415	1185	2210	1945	1630
NL2300	230	950	550	1500	2510	2375	1800
NL2500	230	1050	550	1600	2670	2495	1800

With Laterals System:

Code 2.5bar	Code 4bar	Model	Vol. (m^3)	Filter Area (m^2)	Flange Connections		Max Flow Rate		Sand Weight (kg)	
					GB(mm)	ANSI	lpm	m^3/h	0.5-0.8mm	1-2mm
88012813	88013213	NL1200	1.17	1.13	80	3"	942	56.5	900	300
88012814	88013214	NL1400	1.64	1.54	100	4"	1283	77	1350	450
88012815	88013215	NL1600	2.48	2.01	100	4"	1675	100.5	2300	700
88012816	88013216	NL1800	4.02	2.52	150	6"	2100	126	2900	900
88012817	88013217	NL2000	4.61	2.97	150	6"	2475	148.5	4000	1100
88012818	88013218	NL2300	8.09	4.34	200	8"	3617	217	6000	1600
88012819	88013219	NL2500	10.00	4.89	200	8"	4075	244.5	6700	1800

With Nozzle System:

Code 2.5bar	Code 4bar	Model	Vol. (m^3)	Filter Area (m^2)	Flange Connections		Max Flow Rate		Sand Weight (kg)	
					GB(mm)	ANSI	lpm	m^3/h	0.5-0.8mm	1-2mm
88013313	88013413	NL1200	1.17	1.13	80	3"	942	56.5	900	300
88013314	88013414	NL1400	1.64	1.54	100	4"	1283	77	1350	450
88013315	88013415	NL1600	2.48	2.01	100	4"	1675	100.5	2300	700
88013316	88013416	NL1800	4.02	2.52	150	6"	2100	126	2900	900
88013317	88013417	NL2000	4.61	2.97	150	6"	2475	148.5	4000	1100
88013318	88013418	NL2300	8.09	4.34	200	8"	3617	217	6000	1600
88013319	88013419	NL2500	10.00	4.89	200	8"	4075	244.5	6700	1800

E SERIES

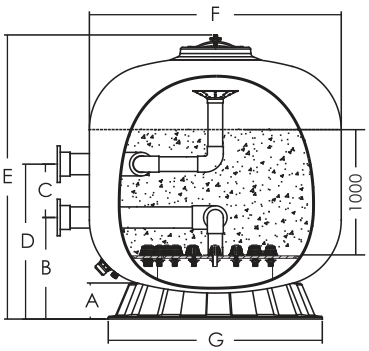

Product Dimensions:

Model	A mm	B mm	C mm	D mm	E mm	F mm	G mm
E1050	170	625	550	1175	1816	1050	960
E1200	190	630	550	1180	1816	1200	995
E1400	200	630	550	1180	1816	1400	1220
E1600	220	720	490	1210	1916	1600	1365
E1800	220	750	440	1190	1956	1800	1630
E2000	230	770	490	1260	2060	2000	1630
E2200	230	940	500	1440	2376	2200	1800

With Laterals System:

Code 2.5bar	Code 4bar	Model	Vol. (m^3)	Filter Area (m^2)	Flange Connections		Max Flow Rate		Sand Weight (kg)	
					GB(mm)	ANSI	lpm	m^3/h	0.5-0.8mm	1-2mm
9014801	9014802	E1050	1.24	0.86	80	3”	717	43	1105	265
9014805	9014806	E1200	1.56	1.13	80	3”	942	56.5	1470	380
9014809	9014810	E1400	2.10	1.54	100	4”	1283	77	1980	410
9014813	9014814	E1600	2.84	2.01	100	4”	1675	100.5	2610	500
9014817	9014818	E1800	3.69	2.54	150	6”	2117	127	3310	620
9014821	9014822	E2000	4.61	3.14	150	6”	2617	157	4030	730
9014825	9014826	E2200	6.49	3.80	200	8”	3167	190	4940	1440

With Nozzle System:

Code 2.5bar	Code 4bar	Model	Vol. (m^3)	Filter Area (m^2)	Flange Connections		Max Flow Rate		Sand Weight (kg)	
					GB(mm)	ANSI	lpm	m^3/h	0.5-0.8mm	1-2mm
9014803	9014804	E1050	1.24	0.86	80	3”	717	43	1105	125
9014807	9014808	E1200	1.56	1.13	80	3”	942	56.5	1470	175
9014811	9014812	E1400	2.10	1.54	100	4”	1283	77	1980	225
9014815	9014816	E1600	2.84	2.01	100	4”	1675	100.5	2610	300
9014819	9014820	E1800	3.69	2.54	150	6”	2117	127	3310	375
9014823	9014824	E2000	4.61	3.14	150	6”	2617	157	4030	450
9014827	9014828	E2200	6.49	3.80	200	8”	3167	190	4940	550

K SERIES

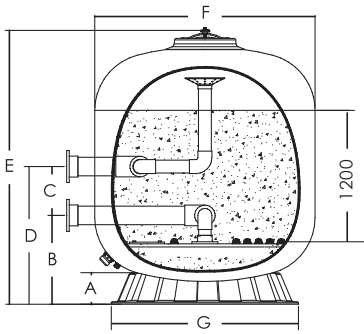

Product Dimensions

Model	A mm	B mm	C mm	D mm	E mm	F mm	G mm
K1050	170	625	550	1175	2016	1050	960
K1200	170	665	350	1015	2080	1200	995
K1400	190	675	350	1025	2175	1400	1220
K1600	200	775	350	1125	2310	1600	1365
K1800	220	780	415	1195	2320	1800	1630
K2000	220	865	415	1280	2460	2000	1630
K2300	230	1060	550	1610	2720	2350	1800
K2500	230	1120	550	1670	2750	2500	1800

With Laterals System

Code 2.5bar	Code 4bar	Model	Vol. (m^3)	Filter Area (m^2)	Flange Connections		Max Flow Rate		Sand Weight (kg)	
					GB(mm)	ANSI	lpm	m^3/h	0.5-0.8mm	1-2mm
9013047	9013048	K1050	1.41	0.86	80	3”	717	43	1370	125
8801151	88013513	K1200	1.93	1.13	80	3”	942	56.5	1500	300
8801151	488013514	K1400	2.57	1.54	100	4”	1283	77	2250	450
8801151	588013515	K1600	3.63	2.01	100	4”	1675	100.5	2900	700
8801151	688013516	K1800	4.73	2.54	150	6”	2100	126	3200	900
8801151	788013517	K2000	5.86	3.14	150	6”	2475	148.5	4300	1100
8801151	888013518	K2300	8.96	4.34	200	8”	3617	217	7600	1600
8801151	988013519	K2500	10.39	4.90	200	8”	4075	244.5	8600	1800

With Nozzle System

Code 2.5bar	Code 4bar	Model	Vol. (m^3)	Filter Area (m^2)	Flange Connections		Max Flow Rate		Sand Weight (kg)	
					GB(mm)	ANSI	lpm	m^3/h	0.5-0.8mm	1-2mm
9013049	9013050	K1050	1.41	0.86	80	3”	717	43	1370	125
88012913	88013613	K1200	1.93	1.13	80	3”	942	56.5	1500	300
88012914	88013614	K1400	2.57	1.54	100	4”	1283	77	2250	450
88012915	88013615	K1600	3.63	2.01	100	4”	1675	100.5	2900	700
88012916	88013616	K1800	4.73	2.54	150	6”	2100	126	3200	900
88012917	88013617	K2000	5.86	3.14	150	6”	2475	148.5	4300	1100
88012918	88013618	K2300	8.96	4.34	200	8”	3617	217	7600	1600
88012919	88013619	K2500	10.39	4.90	200	8”	4075	244.5	8600	1800

Commercial Filter H SERIES

Filtration System

laterals

Design Filtration Velocity

20/30/40m³/h/m²

Max Operating Pressure

36psi(2.5bar)
58psi(4.0bar)

Max Temperature

43°C (109°F)

Suggested Size of Media

0.5-0.8mm
1-2mm

Long Service Life, High Filtration Surface

Application Suggestions:

* Large scale water features,
* Aquatic Park and Aquarium
* Commercial pool

Product Features:

* Multi-construction layers: non-corrosive and chemical protective
* UV resistance, suitable for operation under prolonged sunlight
* Inner filtration system with evenly spread laterals enhances filtration performance.
* Bobbin wound fiberglass reinforcement with polyester resin
* Service manhole for easy maintenance
* Equipped with manometer for easy reading of the working pressure of both inlet and outlet.

Note: Suggested sand weight varies with differences in filter media size. For reference only.
Flange connection standard optional: GB(HG20592 PN1.0MPa) or ANSI(ANSI B16.5(1988) Class150)

H SERIES

Diagrams:

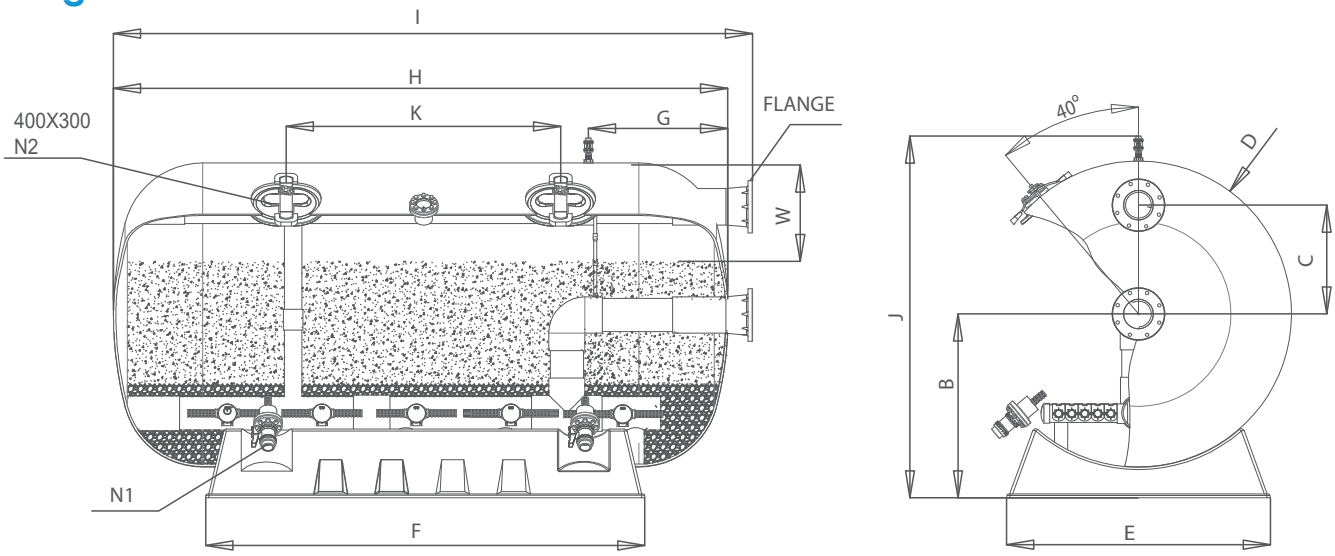

Diameter: 1200mm / Sand bed depth: 0.6m

Technical Information and Product Dimensions:

Code 2.5bar	Code 4bar	Model No.	Flange Connections GB(mm)	Flange Connections ANSI	Max. Flow Rate m^3/h	Velocity $m^3/h/m^2$	Filtration Area (m^2)	Sand(kg) 0.4-0.8mm	Sand(kg) 1-2mm	Dimensions (mm) B	C	D	E	F	G	H	I	J	K	N1 size*pcs	N2	W
88350102	88350107	H1200-1.9	100	4"	39	20	1.96	1100	425	747	325	1200	1100	1190	650	1900	2030	1500	/	2"*1	1	350
88350103	88350108		150	6"	79	40											2060		/	2"*1	1	
88350202	88350207	H1200-2.3	100	4"	48	20	2.42	1425	550	747	325	1200	1100	1590	650	2300	2430	1500	/	2"*1	1	350
88350203	88350208		150	6"	97	40											2460		/	2"*1	1	
88350302	88350307	H1200-2.5	100	4"	53	20	2.65	1750	700	747	325	1200	1100	1790	650	2500	2630	1500	/	2"*1	1	350
88350303	88350308		150	6"	107	40											2660		/	2"*1	1	
88350402	88350407	H1200-2.7	100	4"	57	20	2.87	2075	825	747	325	1200	1100	1990	650	2700	2830	1500	/	2"*1	1	350
88350403	88350408		150	6"	115	40											2860		/	2"*1	1	
88350502	88350507	H1200-3.0	100	4"	64	20	3.21	2325	925	747	325	1200	1100	2290	650	3000	3130	1500	1330	2"*1	2	350
88350503	88350508		150	6"	129	40											3160		1330	2"*1	2	

Diameter: 1400mm / Sand bed depth: 0.8m

Technical Information and Product Dimensions:

Code 2.5bar	Code 4bar	Model No.	Flange Connections GB(mm)	Flange Connections ANSI	Max. Flow Rate m^3/h	Velocity $m^3/h/m^2$	Filtration Area (m^2)	Sand(kg) 0.4-0.8mm	Sand(kg) 1-2mm	Dimensions (mm) B	C	D	E	F	G	H	I	J	K	N1 size*pcs	N2	W
88350602	88350607	H1400-1.9	100	4"	45	20	2.23	2100	575	847	390	1400	1130	1340	730	1900	2030	1700	/	2"*1	1	390
88350603	88350608		150	6"	89	40											2060		/	2"*1	1	
88350702	88350707	H1400-2.5	100	4"	60	20	3.02	2825	800	847	390	1400	1130	1840	730	2500	2630	1700	/	2"*1	1	390
88350703	88350708		150	6"	121	40											2660		/	2"*1	1	
88350802	88350807	H1400-3.0	100	4"	73	20	3.67	3450	1000	847	390	1400	1130	2340	730	3000	3130	1700	1260	2"*1	2	390
88350803	88350808		150	6"	110	30											3160		1260	2"*1	2	
88350804	88350809		200	8"	147	40											3180		1260	2"*1	2	390

H SERIES

Diameter: 1600mm / Sand bed depth: 1.0m

Technical Information and Product Dimensions:

Code 2.5bar	Code 4bar	Model	Flange Connections		Max. Flow Rate	Velocity	Filtration	Sand (kg)		Dimensions (mm)												
			GB(mm)	ANSI	m^3/h	$m^3/h/m^2$	Area (m^2)	0.4-0.8mm	1-2mm	B	C	D	E	F	G	H	I	J	K	N1 size*pcs	N2	W
88350902	88350907	H1600-1.9	100	4”	49	20	2.47	2850	600	945	475	1600	1440	1210	810	1900	2130	1900	/	4”*1	1	470
88350903	88350908		150	6”	99	40											2160		/	4”*1	1	
88351003	88351008	H1600-2.5	150	6”	101	30	3.36	3875	850	945	475	1600	1440	1710	810	2500	2660	1900	/	4”*1	1	470
88351004	88351009		200	8”	134	40											2680		/	4”*1	1	
88351103	88351108	H1600-3.0	150	6”	123	30	4.10	4750	1050	945	475	1600	1440	2210	810	3000	3160	1900	1200	4”*1	2	470
88351104	88351109		200	8”	164	40											3180		1200	4”*1	2	

Diameter: 1800mm / Sand bed depth: 1.0m

Technical Information and Product Dimensions:

Code 2.5bar	Code 4bar	Model	Flange Connections		Max. Flow Rate	Velocity	Filtration	Sand (kg)		Dimensions (mm)												
			GB(mm)	ANSI	m^3/h	$m^3/h/m^2$	Area (m^2)	0.4-0.8mm	1-2mm	B	C	D	E	F	G	H	I	J	K	N1 size*pcs	N2	W
88351203	88351208	H1800-2.5	150	6”	112	30	3.74	4850	975	1100	550	1800	1380	1560	850	2500	2660	2170	/	4”*1	1	530
88351204	88351209		200	8”	150	40											2680	2170	/	4”*1	1	
88351303	88351308	H1800-3.0	150	6”	137	30	4.58	5925	1225	1100	550	1800	1380	2060	850	3000	3160	2170	/	4”*1	1	530
88351304	88351309		200	8”	183	40											3180	2170	/	4”*1	1	
88351404	88351409	H1800-3.5	200	8”	162	30	5.41	7000	1475	1100	550	1800	1380	2560	850	3500	3680	2170	1300	4”*1	2	530
88351405	88351410		250	10”	216	40											3680	2170	1300	4”*1	2	
88351503	88351508	H1800-4.0	150	6”	125	20	6.25	8075	1700	1100	550	1800	1380	3060	850	4000	4160	2170	1820	4”*2	2	530
88351504	88351509		200	8”	187	30											4180	2170	1820	4”*2	2	
88351505	88351510		250	10”	250	40											4180	2170	1820	4”*2	2	

Diameter: 2000mm / Sand bed depth: 1.2m

Technical Information and Product Dimensions:

Code 2.5bar	Code 4bar	Model	Flange Connections		Max. Flow Rate	Velocity	Filtration	Sand (kg)		Dimensions (mm)												
			GB(mm)	ANSI	m^3/h	$m^3/h/m^2$	Area (m^2)	0.4-0.8mm	1-2mm	B	C	D	E	F	G	H	I	J	K	N1 size*pcs	N2	W
88351603	88351608	H2000-2.5	150	6”	130	30	4.34	6576	1050	1200	710	2000	1720	1380	1000	2500	2660	2370	/	4”*1	1	700
88351604	88351609		200	8”	174	40											2680			4”*1	1	
88351703	88351708	H2000-3.0	150	6”	159	30	5.30	8025	1300	1200	710	2000	1720	1880	1000	3000	3160	2370	/	4”*1	1	700
88351704	88351709		200	8”	212	40											3180			4”*1	1	
88351803	88351808	H2000-3.5	150	6”	125	20	6.25	9475	1550	1200	710	2000	1720	2380	1000	3500	3660	2370	1300	4”*1	2	700
88351804	88351809		200	8”	187	30											3680			4”*1	2	
88351805	88351810		250	10”	250	40											3680			4”*1	2	
88351903	88351908	H2000-4.0	150	6”	144	20	7.21	10925	1800	1200	710	2000	1720	2880	1000	4000	4160	2370	1800	4”*2	2	700
88351904	88351909		200	8”	216	30											4180			4”*2	2	
88351905	88351910		250	10”	288	40											4180			4”*2	2	
88352004	88352009	H2000-4.5	200	8”	245	30	8.16	12375	2075	1200	710	2000	1720	3380	1000	4500	4680	2370	2300	4”*2	2	700
88352005	88352010		250	10”	326	40											4680			4”*2	2	
9014437	9014438	H2000-4.5	200	8”	273	30	9.11	13825	2350	1200	710	2000	1720	3880	1000	5000	5270	2370	2800	4”*2	2	700
9014439	9014440		250	10”	364	40											5270			4”*2	2	

Product Focuses:

Sightglass

Lateral System

Air Vent Valve

Union Drain

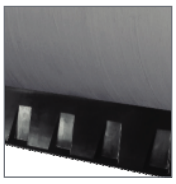
Base

Manometer

Manhole

Flange

H SERIES

Diameter: 2350mm / Sand bed depth: 1.2m

Technical Information and Product Dimensions:

Code 2.5bar	Code 4bar	Model	Flange Connections		Max. Flow Rate m^3/h	Velocity $m^3/h/m^2$	Filtration Area (m^2)	Sand (kg)		Dimensions (mm)												
			GB(mm)	ANSI				0.4-0.8mm	1-2mm	B	C	D	E	F	G	H	I	J	K	N1 size*pcs	N2	W
88352103	88352108		150	6”	119	20											3160	2730	/	4”*1	1	
88352104	88352109	H2350-3.0	200	8”	178	30	5.94	9300	2575	1390	710	2350	1950	1270	1180	3000	3180	2730	/	4”*1	1	750
88352105	88352110		250	10”	238	40											3180	2730	/	4”*1	1	
88352203	88352208		150	6”	141	20											3660	2730	/	4”*1	1	
88352204	88352209	H2350-3.5	200	8”	212	30	7.06	11050	3125	1390	710	2350	1950	1770	1180	3500	3680	2730	/	4”*1	1	750
88352205	88352210		250	10”	282	40											3680	2730	/	4”*1	1	
88352304	88352309	H2350-4.0	200	8”	163	20	8.17	12800	3650	1390	710	2350	1950	2270	1180	4000	4180	2730	1400	4”*2	2	750
88352305	88352310		250	10”	327	40											4180	2730	1400	4”*2	2	
88352404	88352409	H2350-4.5	200	8”	186	20	9.28	14525	4200	1390	710	2350	1950	2770	1180	4500	4680	2730	1900	4”*2	2	750
88352405	88352410		250	10”	371	40											4680	2730	1900	4”*2	2	
88352504	88352509		200	8”	208	20											5180	2730	2400	4”*2	2	
88352505	88352510	H2350-5.0	250	10”	312	30	10.4	16250	4750	1390	710	2350	1950	3270	1180	5000	5180	2730	2400	4”*2	2	750
88352511	88352512		300	12”	416	40											5180	2730	2400	4”*2	2	

Diameter: 2500mm / Sand bed depth: 1.3m

Technical Information and Product Dimensions:

Code 2.5bar	Code 4bar	Model	Flange Connections		Max. Flow Rate m^3/h	Velocity $m^3/h/m^2$	Filtration Area (m^2)	Sand (kg)		Dimensions (mm)												
			GB(mm)	ANSI				0.4-0.8mm	1-2mm	B	C	D	E	F	G	H	I	J	K	N1 size*pcs	N2	W
88352603	88352608		150	6”	149	20											3660	2900	/	4”*1	1	
88352604	88352609	H2500-3.5	200	8”	223	30	7.34	11675	3175	1480	710	2500	2120	1850	1270	3500	3680	2900	/	4”*1	1	750
88352605	88352610		250	10”	297	40											3680	2900	/	4”*1	1	
88352704	88352709	H2500-4.0	200	8”	172	20	8.62	13500	3725	1480	710	2500	2120	2350	1270	4000	4180	2900	1200	4”*2	2	750
88352705	88352710		250	10”	345	40											4180	2900	1200	4”*2	2	
88352804	88352809		200	8”	196	20											4680	2900	1700	4”*2	2	
88352805	88352810	H2500-4.5	250	10”	294	30	9.80	15350	4300	1480	710	2500	2120	2850	1270	4500	4680	2900	1700	4”*2	2	750
88352811	88352812		300	12”	392	40											4680	2900	1700	4”*2	2	
88352904	88352909		200	8”	220	20											5180	2900	2200	4”*2	2	
88352905	88352910	H2500-5.0	250	10”	329	30	10.98	17200	4850	1480	710	2500	2120	3350	1270	5000	5180	2900	2200	4”*2	2	750
88352911	88352912		300	12”	439	40											5180	2900	2200	4”*2	2	

Diameter: 3000mm / Sand bed depth: 1.5m

Technical Information and Product Dimensions:

Code 2.5bar	Code 4bar	Model	Flange Connections		Max. Flow Rate m^3/h	Velocity $m^3/h/m^2$	Filtration Area (m^2)	Sand (kg)		Dimensions (mm)												
			GB(mm)	ANSI				0.4-0.8mm	1-2mm	B	C	D	E	F	G	H	I	J	K	N1 size*pcs	N2	W
88353004	88353009		200	8”	180	20											3680	3410	/	4”*1	1	
88353005	88353010	H3000-3.5	250	10”	270	30	8.98	17850	4525	1730	710	3000	2600	1880	1480	3500	3680	3410	/	4”*1	1	1100
88353011	88353012		300	12”	360	40											3680	3410	/	4”*1	1	
88353104	88353109		200	8”	208	20											4180	3410	/	4”*1	1	
88353105	88353110	H3000-4.0	250	10”	312	30	10.40	20675	5300	1730	710	3000	2600	2380	1480	4000	4180	3410	/	4”*1	1	1100
88353111	88353112		300	12”	416	40											4180	3410	/	4”*1	1	
88353204	88353209		200	8”	236	20											4680	3410	/	4”*1	1	
88353205	88353210	H3000-4.5	250	10”	355	30	11.82	23500	6100	1730	710	3000	2600	2880	1480	4500	4680	3410	/	4”*1	1	1100
88353211	88353212		300	12”	473	40											4680	3410	/	4”*1	1	
88353304	88353309		200	8”	265	20											5180	3410	1600	4”*2	2	
88353305	88353310	H3000-5.0	250	10”	397	30	13.24	26300	6875	1730	710	3000	2600	3380	1480	5000	5180	3410	1600	4”*2	2	1100
88353311	88353312		300	12”	530	40											5180	3410	1600	4”*2	2	

Dual Stack Sand Filters

For aquarium and large scale waterland

Filtration System

laterals

Design Filtration Velocity

$30m^3/h/m^2$

Max Operating Pressure

58psi(4.0bar)

Max Temperature

43°C (109°F)

Suggested Size of Media

0.5-0.8mm
1-2mm

Demand

Minimal Footprint

The Emaux Dual Stack Sand Filter is engineered to the highest strength and durability. The filter is built to maximize long term performance to resist structural failures caused by corrosion and pressure. It offers a vertically stacked design that doubles the filtration capacity for the same footprint. The Dual Stack Sand Filter is ideal for high-load or high-flow of water facilities such as public pools and water parks.

Product Features:

1. Minimizes the floor space for installation
2. Integral base design and self-supporting stackable structure
3. Available in a complete system using Emaux manifold valve systems
4. Optional Vinyl Ester coating maximizes corrosion resistance against saltwater and all kind of pool chemicals including ozone.

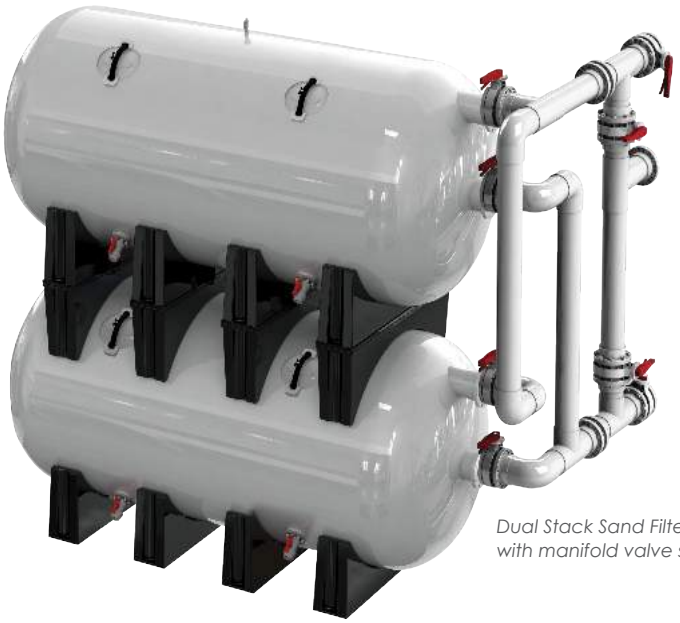

Dual Stack Sand Filter with manifold valve system

Technical Information and Product Dimensions:

Model	Tank Size (mm)	Filter Area (m^2)	Flange Connections		Max Flow Rate m^3/h	Velocity $m^3/h/m^2$	Max Operation Pressure (Bar)	L (mm)	W (mm)	H (mm)
			GB(mm)	ANSI						
TH1400-2.5	1400 x 2500	3.02 x 2	150	6”	181	30	4	2630	1370	3291
TH1600-2.5	1600 x 2500	3.36 x 2	150	6”	201	30	4	2630	1570	3827
TH2000-4.5	2000 x 4500	8.16 x 2	200	8”	489	30	4	4650	1920	4634

Flange connection standard optional: GB(HG20592 PN1.0MPa) or ANSI(ANSI B16.5(1988) Class150)

Butterfly Valve Dimensions:

Code	Model	Valve Connection		A (mm)	B (mm)	C (mm)	D (mm)	E (mm)	F (mm)
		GB(mm)	ANSI						
9080203	DBV60-TH1400	160	6”	390	1970	2805	386	2023	352
9080202	DBV60-TH1600	160	6”	475	1970	2396	386	1638	352
9080201	DBV60-TH2000	200	8”	710	2836	3538	940	2121	464

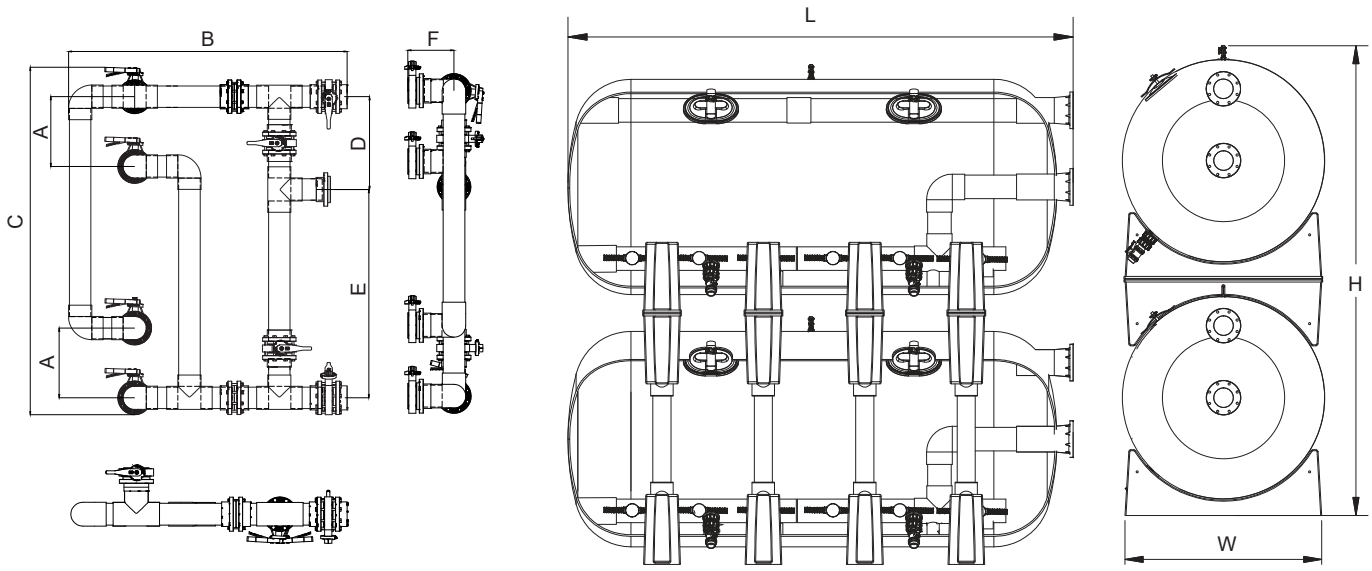

Large Size Horizontal Sand Filter

Filtration System

laterals

Design Filtration Velocity

$30m^3/h/m^2$

Max Operating Pressure

58psi(4.0bar)

Max Temperature

43°C (109°F)

Suggested Size of Media

0.5-0.8mm
1-2mm

Horizontal GIANT!

Custom-Built Available

Horizontal sand filter provides a larger filtration area for installation space optimization. Emaux manufactures horizontal sand filter up to 3 meters in diameter and 10 meters in length. Emaux is also able to build to individual project requirements. Dimensions can be modified according to project specifications.

Applications Suggestions:

* Aquarium
* Large Scale Waterland

3m

Max Diameter

10m

Max Length

Typical Specification Guideline

Model	Tank Size (mm)	Filter Area (m2)	Flange Connections		Max Flow Rate m^3/h	Velocity $m^3/h/m^2$	Max Operation Pressure (Bar)
			GB(mm)	ANSI			
H3000 - 10.0	3000 x 10000	27.44	200/450	8”/18”	650	23.7	4

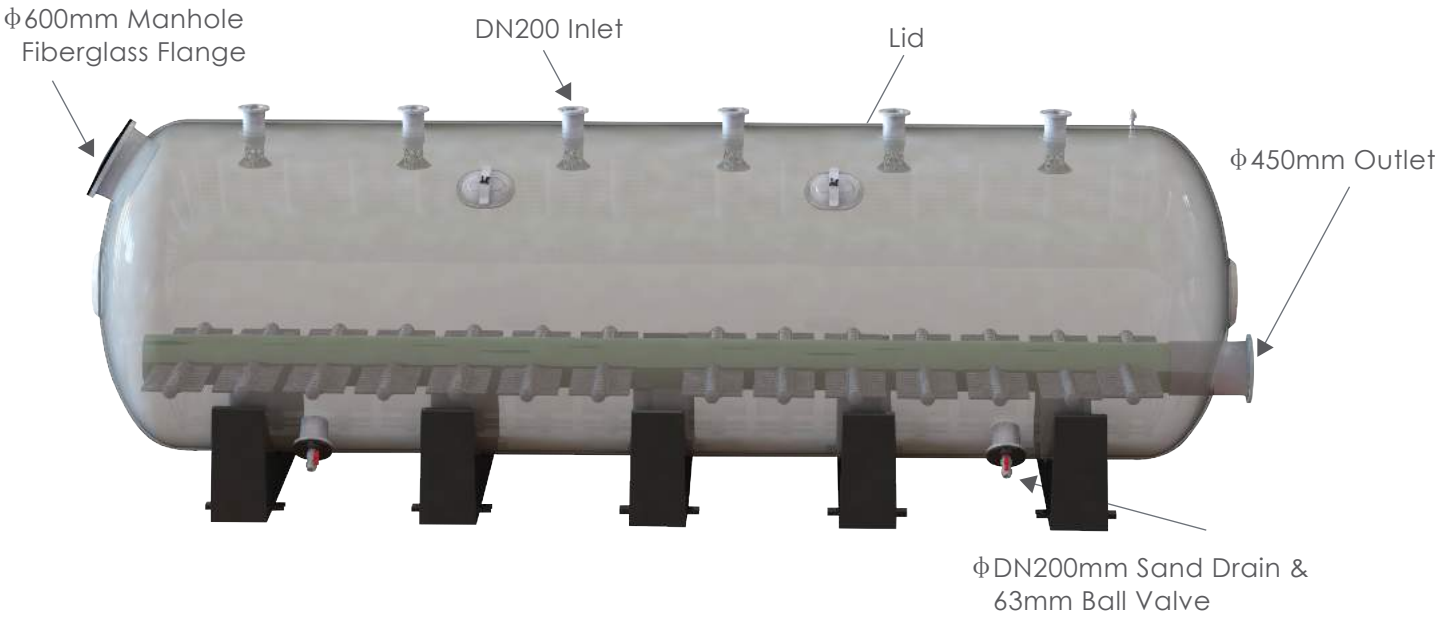

Typical Specification Guideline

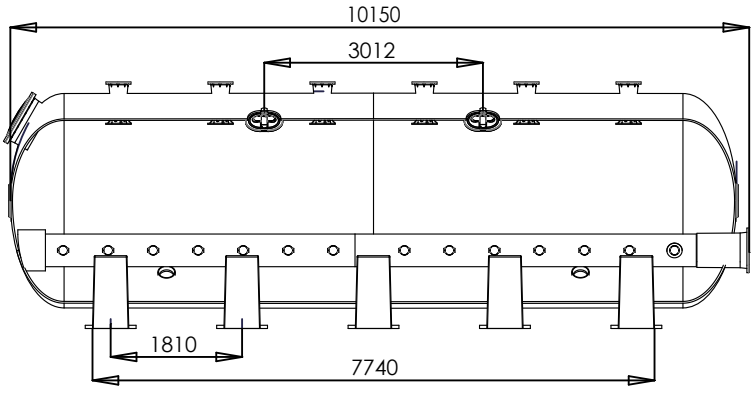

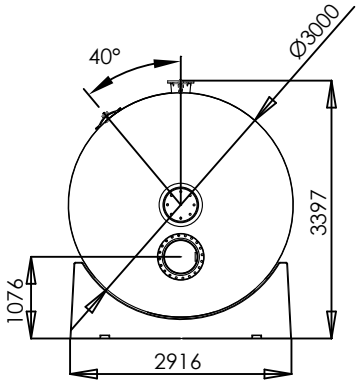

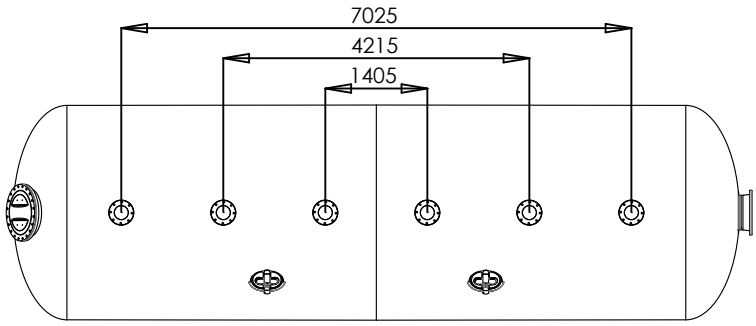

NOTES

NOTES

EMAUX WATER TECHNOLOGY CO., LTD
ADDRESS: Flat A-D, 20/F., Kai Bo 22, 22 Wing Kin Road, Kwai Chung, Hong Kong
PHONE +852 2832 9880
www.emauxgroup.com

YOUR PREMIER SUPPLIER

Available from:

ALL SPECIFICATIONS ARE SUBJECT TO CHANGE WITHOUT NOTICE.

© 2021 EMAUX WATER TECHNOLOGY CO., LTD. ALL RIGHTS RESERVED.